FIG. 6. NEW HORIZON LINE 2½ INCH TYPES 251 & 255
REV 12/30/02 (Dwg. 3151K11)

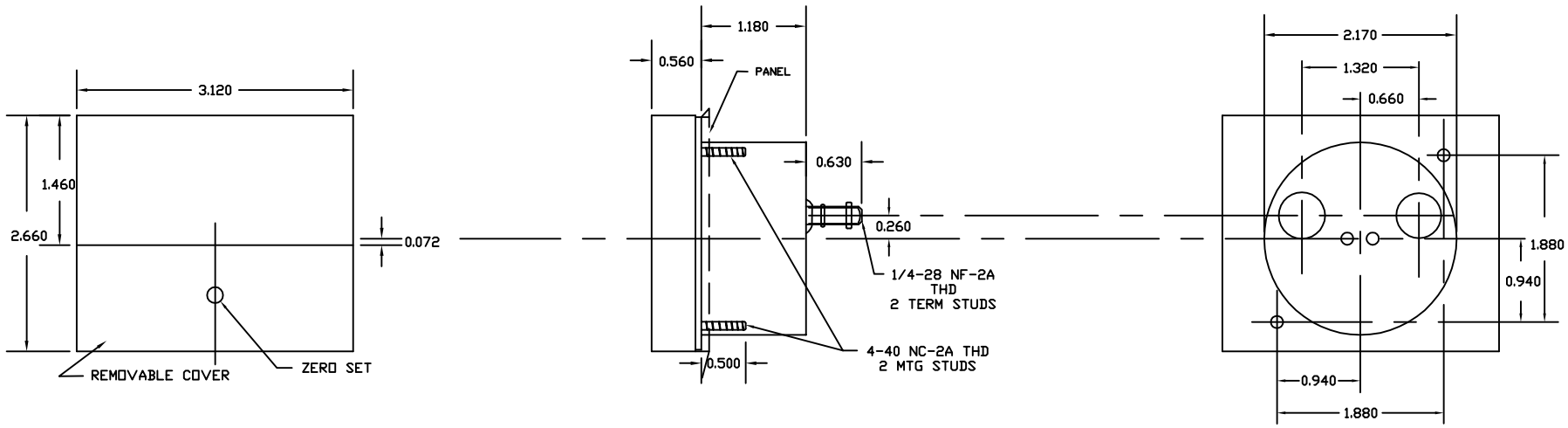

REAR VIEW
FREQ. METER

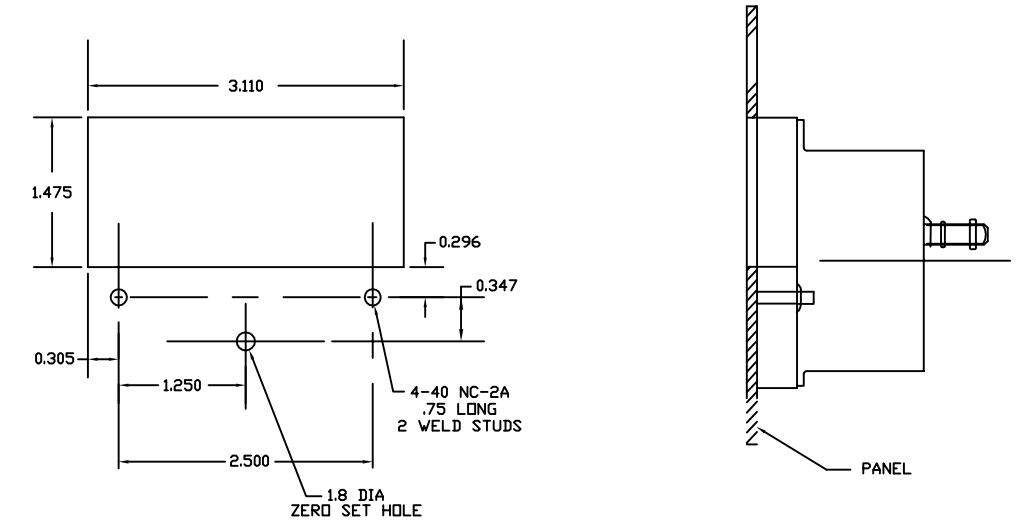

PANEL CUTOUT
FOR MOUNTING METER BEHIND PANEL

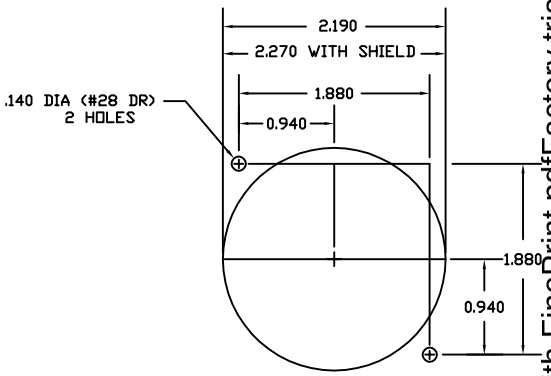

PANEL DRILLING
FOR FRONT MOUNTING

PDF created with FinePrint pdfFactory trial version http://www.fineprint.com